HANDLES

Hand Lift Handle

MAT'L: LOW CARBON STEEL

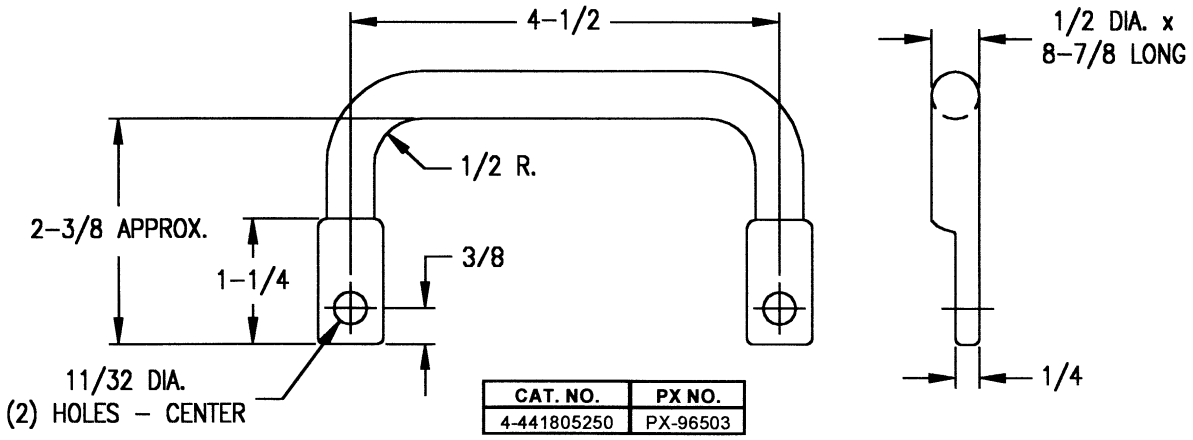

CAT. NO.	PX NO.
4-441805250	PX-96503

Hand Lift Handle

MAT'L: LOW CARBON STEEL

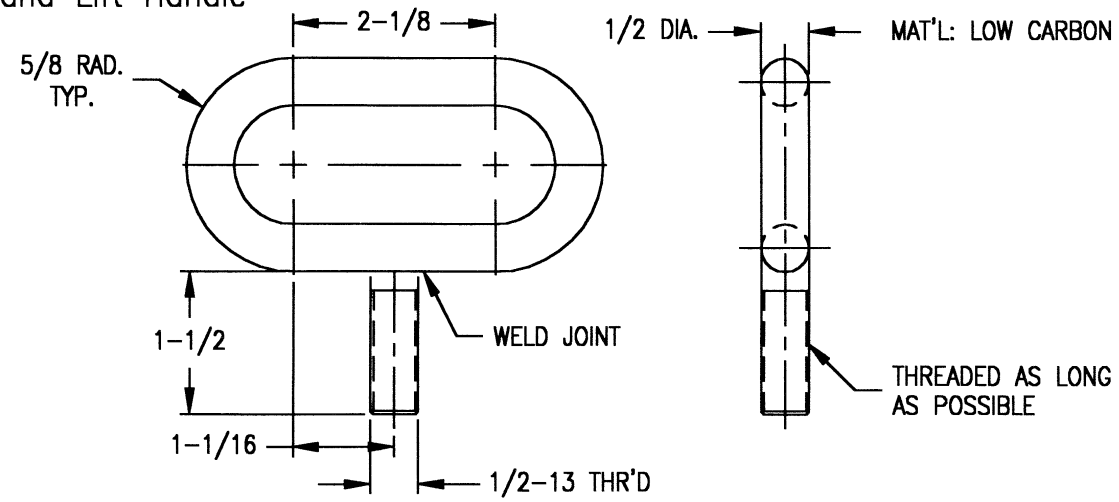

CAT. NO.	PX NO.
4-441805150	PX-96089

Hand Lift Handle

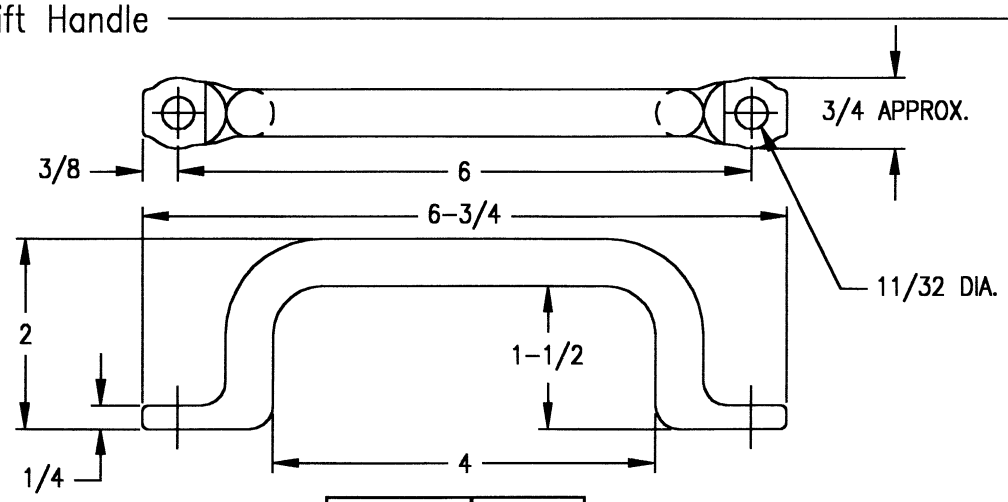

CAT. NO.	PX NO.
4-441805400	PX-96631